#651100

Trac·Rite®

ROLLING CURTAIN DOOR INSTALLATION, MAINTENANCE & PARTS MANUAL

MODEL 988 & 988WL

⚠ WARNING

Read manual thoroughly prior to installing door. Rolling steel doors are large, heavy objects that move with the help of springs under extreme tension. Since moving objects and springs under tension can cause injuries, your safety and the safety of others depends on you reading and following the information in this manual. Check your work prior to operating door.

POTENTIAL HAZARD	EFFECT	PREVENTION
MOVING DOOR	Can Cause Serious Injury or Death	Keep people clear of opening while door is moving. Get help or use support when lifting new door into place.
EXTREME SPRING TENSION	Can Cause Serious Injury or Death	Installation, repairs, and adjustments must be made by a qualified door mechanic using proper tools, methods, and instructions. Before winding torsion spring, make sure door is fully open and curtain is wrapped on barrel.

NOTE!

DO NOT CUT BANDS which hold door in a roll. You will be informed when to cut bands within this manual. No guarantee will be given or responsibility accepted by Trac-Rite Door, Inc. if door is not installed as instructed. For proper operation, follow instructions given.

⚠ CAUTION

Use proper lifting equipment and correct lifting procedures to avoid injury.

⚠ CAUTION

If door springs are not adjusted properly, door damage can result. Door should not slam up or down

314 Wilburn Road, Sun Prairie, WI 53590
Phone: 800-448-8979; Fax: 800-236-8722
Technical Help Line: 888-700-TRAC (8722)
Web Site: www.tracrite.com
E-mail: tr@tracrite.com

This Manual MUST Be Left with the Owner.

06/24

Door Assembly - Parts Layout

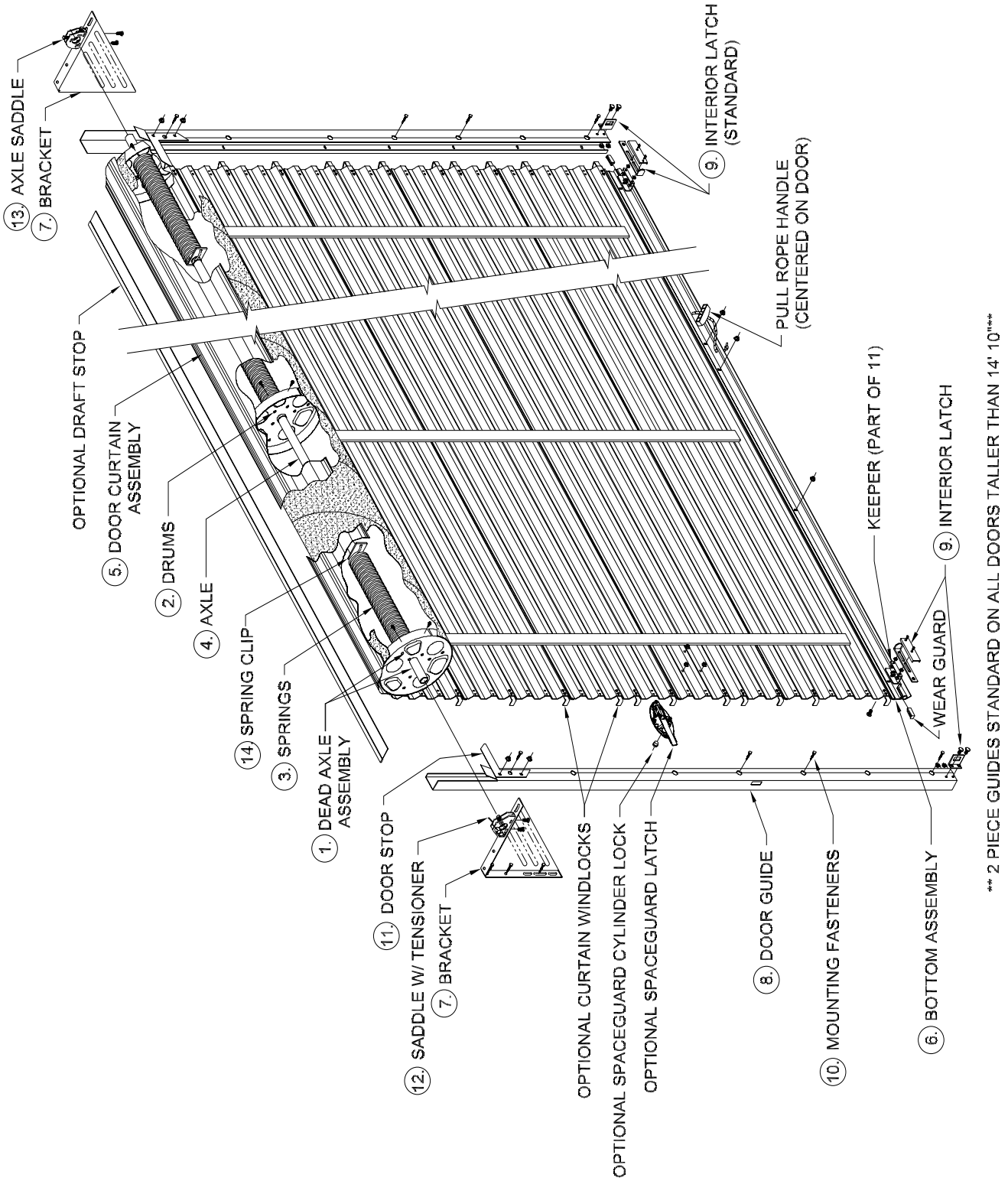

⚠ WARNING

Improper installation of anchoring devices or installation into unsound material may result in premature product wear, product failure, property damage or serious personal injury.

Prior to beginning door installation, read the instruction manual in its entirety. Please contact Trac-Rite with any questions at 888-700-8722. Answering questions up front will greatly reduce the probability of installation miscues.

1. GENERAL:

The following terms are defined as:

Warning - serious personal injury or death can result from failure to follow instructions.

Caution - minor injury or property damage can result from failure to follow instructions.

Note - special attention should be given to the instructions.

NOTE!

1) Do not install this rolling steel curtain door unless you read and understand the installation instructions!

2) DO NOT CUT THE BANDS which hold the door curtain in a roll! This is performed once the door has been hung in the opening.

3) DO NOT REMOVE WHITE FELT TAPE on the inside of the door curtain. It is a door component, NOT packaging material.

2. INSPECTION:

2.1 Door and Hardware: Upon receiving the door shipment, immediately inspect the door and hardware for damage. Verify the product received with the packing list. Damages and/or shortages should be reported immediately to Trac-Rite customer service at 800-448-8979 or tr@tracrite.com. Please have your bill of lading and packing list to reference when reporting shortages or damage. Do not install damaged material without authorization from Trac-Rite.

2.2 Door Width Verification: The door curtain width should measure 5” greater than the framed opening width. If the door is equipped with windlocks, the curtain width should measure 3” greater than the framed opening.

2.3 Framed Opening Verification:

- Proper size dimensionally?
- Opening square? Plumb?
- Is the jamb structurally/dimensionally adequate? Reference paragraph 3. Jamb Preparation for specifics.
- Clearances? (Reference Figure 1)

3. JAMB PREPARATION:

3.1 Are the jambs structurally and/or dimensionally adequate to accept door brackets and guides? **Trac-Rite is not responsible for the structural integrity of the jamb itself!**

3.2 Narrow Jamb Application: Narrow jamb plates are available, for situations in which the jamb is not wide enough for bracket mounting. This condition should be made known at the time of order entry so that you will have the hardware when you need it. (See Figure 2).

3.3 **Trac-Rite does not supply fasteners** for attaching the door brackets and guides to concrete or concrete masonry jambs. Trac-Rite does supply fasteners for metal and wood jambs.

- Door bracket to jamb fasteners must be 3/8” in

⚠ WARNING

Do not use model 944 and 955 hardware on model 988 doors. It is not structurally adequate. If door falls, serious injury and/or damage to door can result.

RECOMMENDED INSTALLATION CLEARANCES					
OPENING HEIGHT	A *	B *	C WOOD/ STEEL	C MASONRY	C MOTOR OPERATOR
7' -10 " - 16' - 0"	20"	22"	7.5"	9"	21.5"
7' - 10" - 16' - 0" WL	21"	23"	7.5"	9"	21.5"

* ADD 1" TO A AND B FOR INSULATED DOORS.

** IF CHAIN HOIST IS NOT PURCHASED, AXLE CAN BE CUT OFF FOR EXTRA SIDE CLEARANCE

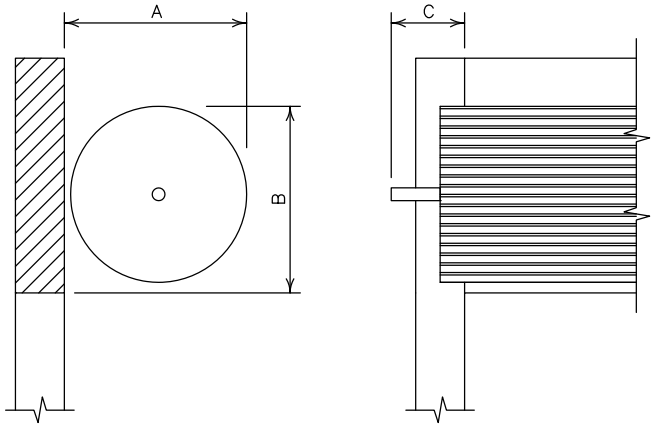

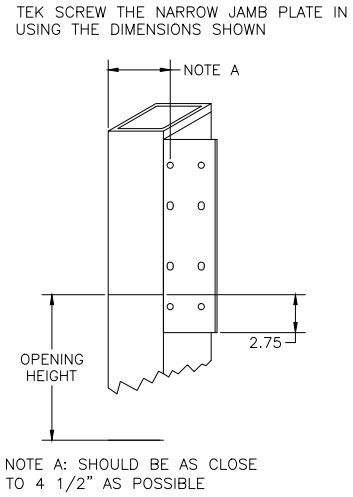

Figure 2.

diameter, and be constructed of ASTM A-307 steel or greater.

- Door guide to jamb fasteners must be 1/4" in diameter, and be constructed of ASTM A-307 steel or greater.

3.3 Pre-drill jambs to accept door brackets; 7/16" diameter holes for 3/8" nuts and bolts in steel jambs, proper size pilot hole for 3/8" lag bolt in wood jambs. Hole locations are shown in Figure 3. Do not pre-drill jambs for door guide installation. NOTE: Door must be hung level to ensure proper tracking.

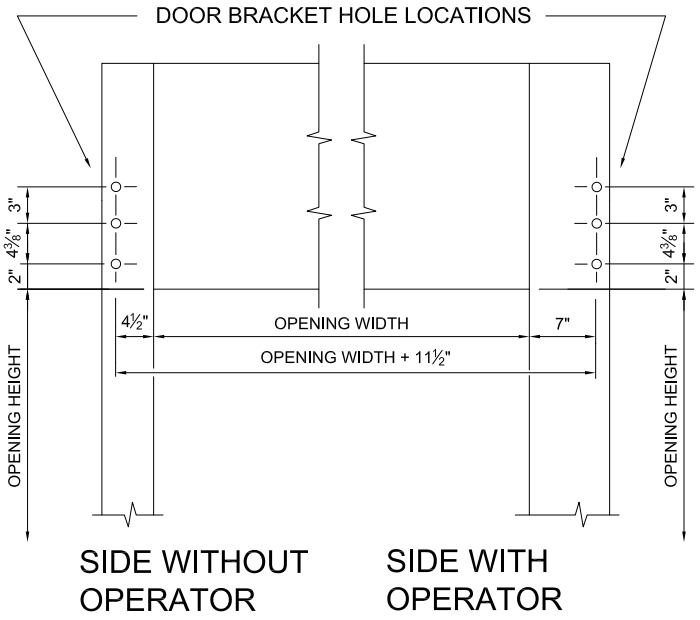

Figure 3.

NOTE!

OPTIONAL OPERATOR CAN BE INSTALLED ON EITHER END OF DOOR ASSEMBLY.

4. DOOR PRE-ASSEMBLY:

4.1 Position the door in the opening as shown in Figure 4. Be sure to place the door on protective material to prevent damage to the curtain.

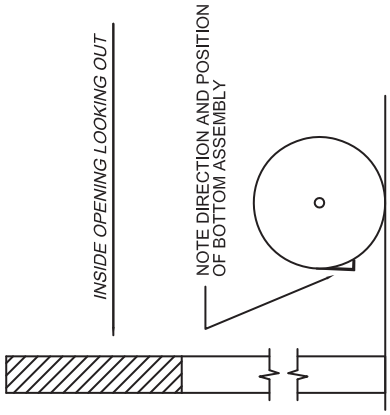

Figure 4.

4.2 **OPTIONAL REDUCED DRIVE SYSTEM** Install the sprocket on the preferred side of door assembly and secure with 3- 3/8" x 1" bolts.

4.3 Slide the chain hoist assembly on the axle and align the sprockets parallel to each other.

4.4 Slide the axle saddle onto the axle after the chain hoist is in place.

4.5 On the opposite side of the reduced-drive chain hoist, slide the saddle with the tension device on the axle (tensioner).

5. BRACKET MOUNTING:

5.1 Mount the Right and Left bracket according to the spacing in Figure 3. Make sure there is enough spacing for the reduced-drive chain hoist on the chosen side of the door assembly. Fasten using the pre-drilled holes and fasteners described in Section 3.

⚠ WARNING

DO NOT allow persons to ride on forklift or other hoisting equipment being used to lift the curtain assembly into position. Do not permit any persons to climb on ladders near the curtain assembly while it is being hoisted. Should the curtain assembly slip, SERIOUS INJURY or DEATH to persons standing on ladders or riding on lifting equipment can occur.

6. HOIST DOOR INTO OPENING:

6.1 Utilizing whatever method currently available (forklift, block and tackle, etc.), hoist the door up over the mounted brackets. Protect the door while lifting by padding the forks of the forklift.

6.2 Position the door on the brackets so the tensioner and axle saddle rest safely on the top flange of the bracket. Make sure arrows on the tensioner and axle saddle are pointing toward the wall.

6.3 Door should be positioned as close as possible to the header and still be able to rotate and clear the bottom bar. The door should also be centered in the opening.

Note: The saddle position on the door mounting bracket will change depending on the height of the door. Position the saddle in the bracket slots according to the following table:

For doors up to 9’11” tall: position one bolt in the near end of the slot closest to the door header and the second bolt in the center slot. See Figure 5.

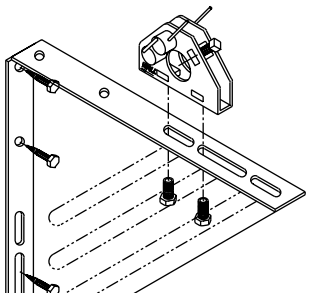

Figure 5.

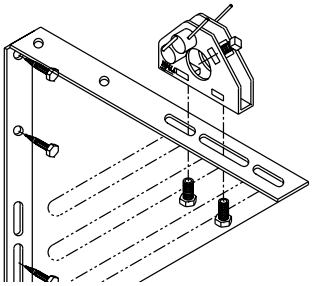

Figure 6.

For doors between 10’0” and 11’11”: position one bolt in the far end of the slot closest to the door header and the second bolt in the center slot. See Figure 6.

For doors between 12’0” and 13’11”: position both bolts in the center slot. See Figure 7.

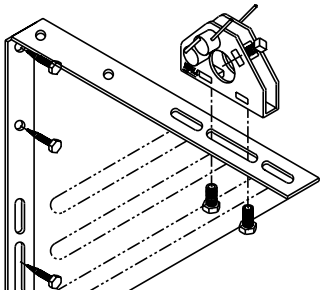

Figure 7.

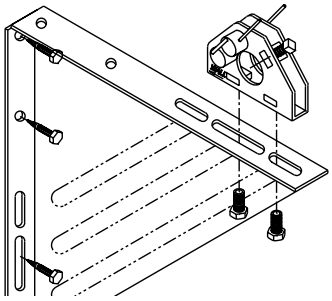

Figure 8.

For doors between 14’0” and 14’11”: position one bolt in the middle of the center slot and the second bolt in the near end of the far slot. See Figure 8.

For doors taller than 15’0”: position one bolt in the far end of the center slot and the second bolt in the third slot. See Figure 9.

Note: Make sure the saddles are spaced evenly from the header.

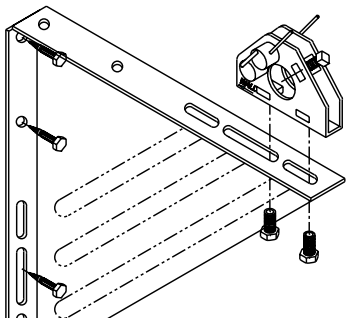

Figure 9.

⚠ WARNING

Do NOT allow door assembly to roll off brackets or move sideways off edge of bracket. If door falls, serious injury or death and/or damage to door can result.

6.4 Fasten the tensioner and the axle saddle to the bracket using 4 - 3/8-16 X 1” hex bolts.

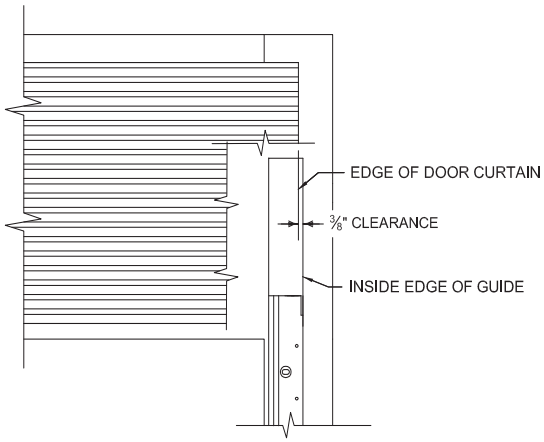

Figure 10.

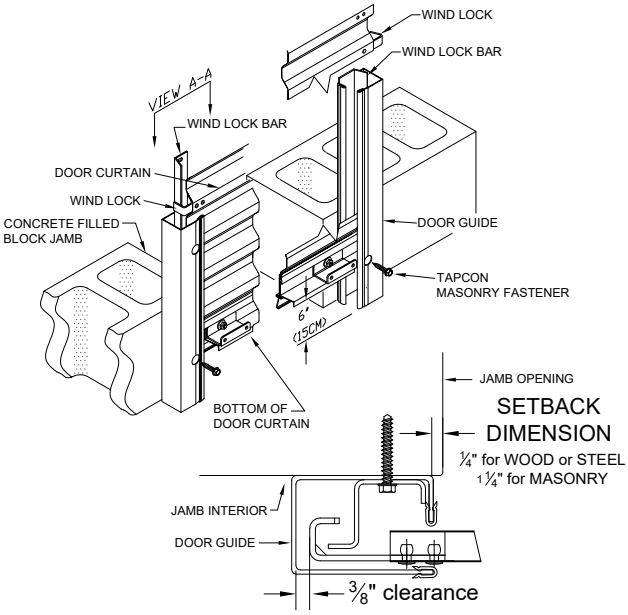

VIEW A-A

Figure 11.

7. GUIDE POSITIONING

7.1 Position the guides against the jambs according to the clearance shown in Figure 10 (Figure 11 if windlock model). Loosely fasten the top of each guide to the door jamb. This will allow slight adjustment of the guides as the door installation is completed (guides on doors 14’-10” and taller will have a splice). **DO NOT** install the remaining fasteners until such time as the adjustment is true. Level one guide and loosely install a second fastener in the bottom hole. If mounting to masonry, install clips provided as shown in Figure 12. Align the clips with the holes along the length of the guide and flush with the back of the guide. (Anchors by others).

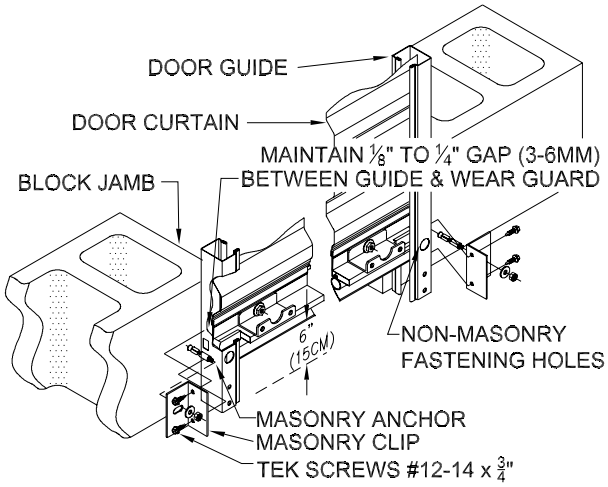

Figure 12

⚠ CAUTION

Care must be taken that the door does not spin around free as this may cause personal injury and/ or damage to the door. DO NOT grab the springs or unbolt the springs while there is tension on the door as this may cause personal injury.

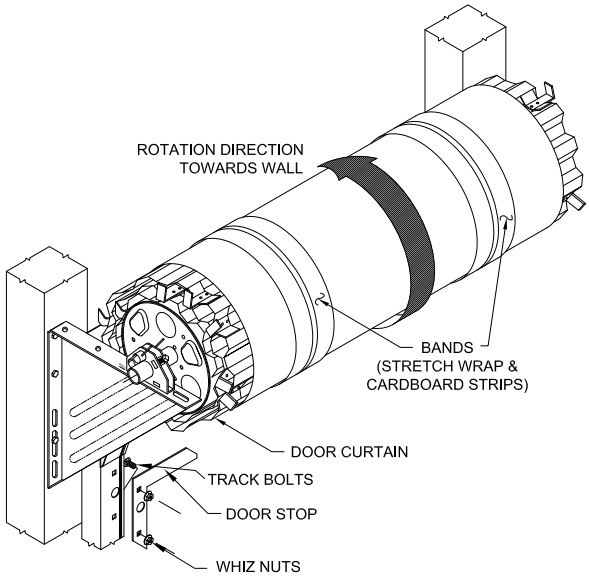

Figure 13.

8. PRE-TENSIONING & TOP STOP ASSEMBLY:

8.1 Install the track bolts, door stops and whiz nuts in each side guide as shown in Figure 13. Do not tighten at this time. Note there are three holes for the top stops - use the lower two holes if exterior door handles will be installed and use the upper two holes if no exterior handles will be installed. Both top stops will need to be in the same set of holes on each side of the door for proper operation.

Note: If installing exterior handles, the door will block part of the finished opening when the door is open.

8.2 Bend the guide tabs out slightly (about 1/4”). Standing inside the opening looking out, place your hand on top of the door and push away from you rotating the door nest (Figure 13). Rotate the door nest two complete revolutions. Hanging on to the door bottom assembly, carefully cut the steel bands and feed the door curtain into the guides, moving the door stops aside to let the bottom bar move past. Pull the door bottom assembly down to waist level.

⚠ WARNING

Immediately install keepers and door stops. These devices will prevent the door from rolling up and out of the guides.

8.3 Attach the two keepers to the bottom interior edge of the door using the installed 1/4” carriage bolt and whiz nut. (Figure 14)

8.4 Tighten door stops installed in paragraph 8.1 making certain track bolts are seated in guides. (Figure 14)

9. GUIDE ADJUSTMENT:

9.1 With the door approximately 6” from the floor, adjust the bottom of the guides so if you grab the door by its bottom assembly, you shall be able to move it laterally approximately 1/4”. If there is not 1/4” of lateral movement, adjust the guide positioning to get 1/4” of lateral movement. Check this adjustment with the door at several different heights and locate the guides to get the correct amount of lateral movement.

NOTE!

For windlocked doors, this is a critical adjustment for the door to operate correctly. Operate the door fully up and down multiple times and if any binding or scraping noises are heard, adjust the door guides to eliminate the binding. Review Fig 11, VA-A for proper windlock clearance.

NOTE!

Door must operate smoothly before a motor operator is installed.

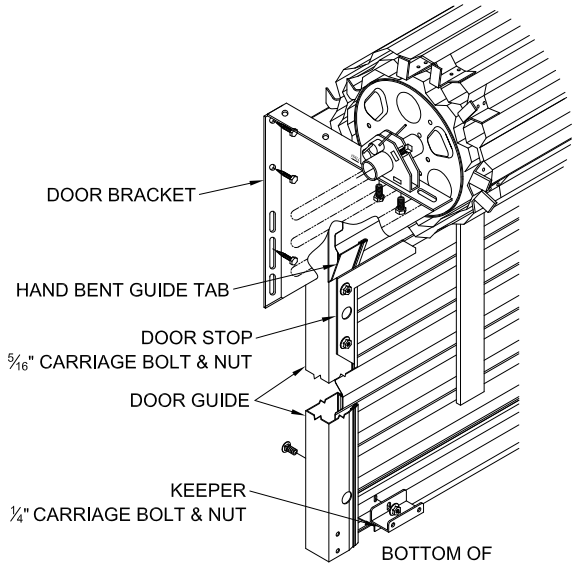

Figure 14.

9.2 Once the guides are adjusted properly and the door runs smoothly, install the remaining fasteners and firmly tighten them.

9.3 Attach guide warning label (shown in Figure 15) to the guide at eye level.

9.4 Attach tension adjustment warning label (shown in Figure 15) either on the door bracket with the tensioner or to wall at eye level.

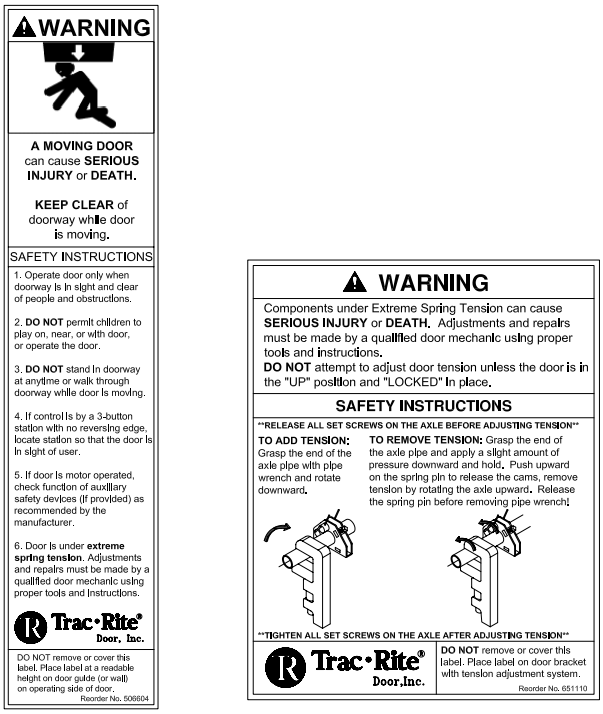

Figure 15.

10. FINAL POSITIONING:

10.1 With the door in the fully open position, loosen all 3/8-16 x 1" wizlock bolts that connect the axle saddles to the door bracket.

10.2 Push the door assembly as close as possible toward the header while also allowing it to rotate freely. Each end of the door should be equal distance from the header. The curtain must be centered in the opening.

10.3 Tighten all 3/8 -16 x 1" wizlock bolts that were loosened in 10.1.

11. INTERIOR LOCK INSTALLATION:

11.1 Position door at waist level.

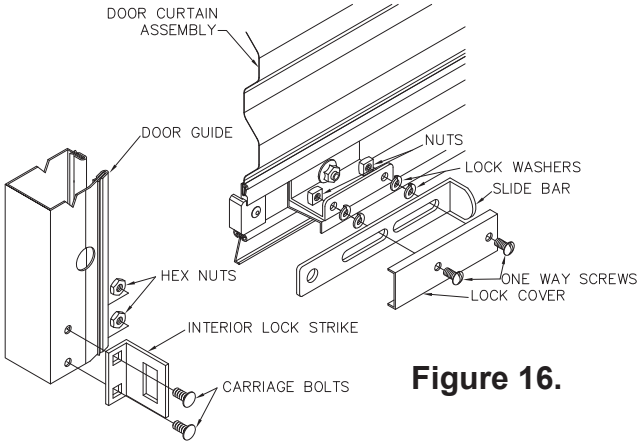

Figure 16.

11.2 Assemble components as shown in Figure 16, noting that two (2) high collar lock washers are placed over each 1/4" one-way screw to allow the lockbar to slide freely.

11.3 As the 1/4" screws are being tightened, move the lockbar to assure that the high collar lock washers are inside the slots in the lockbar.

11.4 Mount the lock strike to the bottom of each guide, as shown, with two (2) 1/4" carriage bolts and jamb nuts through the pre-punched holes.

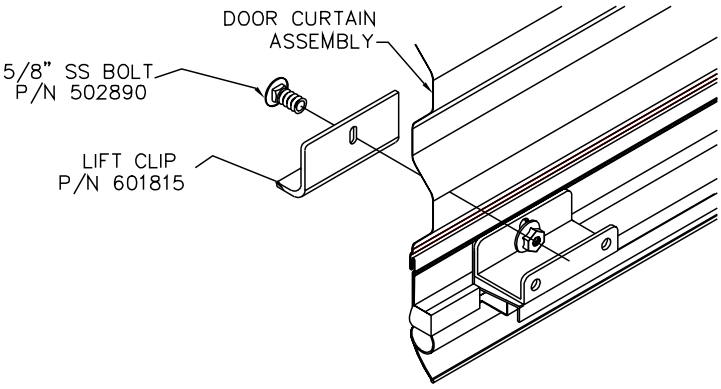

Figure 17.

12. LIFT CLIP INSTALLATION:

12.1 If your door is equiped with an exterior latch, install the lift clip on the exterior of the door as shown in Figure 17. Replace the current stainless steel bolt with the longer 5/8" bolt supplied.

13. OPERATORS:

13.1 **Manual operation** -- Pull rope handle: Tie a knot in one end of the rope. Slide the plastic handle onto the rope and pull the knot up into the handle. Pass the other end of the rope through the hole in the center of the bottom edge of the door and tie another knot in the end to keep the rope from pulling through.

13.2 **Reduced-drive operator** — 8:1 chain hoist assembly should be installed as described in Section 4 and shown in Figure 18.

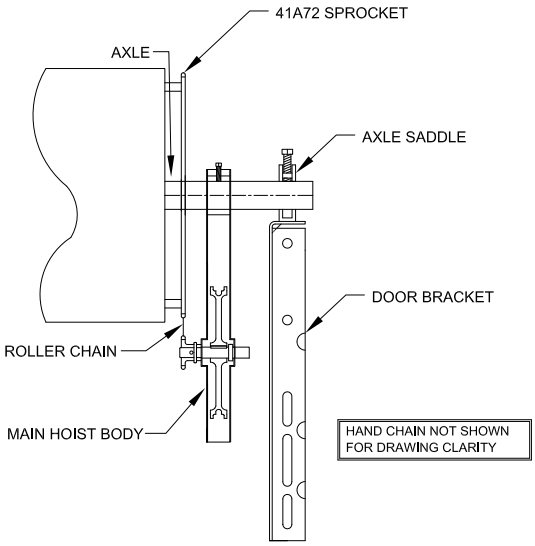

Figure 18.

13.2.1 Reduced-drive operator - 8:1 Chain hoist assembly should be installed as described in Section 4 and shown in Figure 18.

13.2.2 Connect the drive chain around both sprockets, using the masterlink provided. Do not secure the chain hoist assembly to the axle at this time. See Figure 18.

13.2.3 Feed hand chain through and around pocket wheel. Shorten chain so that it does not lay on the floor (1' to 3' off floor). Close chain making certain there are no twists in the chain.

13.2.4 Before operating chain hoist make sure the chain hoist assembly is secured to the axle with set screw.

⚠ WARNING

Components under extreme spring tension can cause SERIOUS INJURY or DEATH. Adjustments and repairs must be made by a qualified door mechanic using proper tools and instructions. DO NOT attempt to adjust door tension unless the door is in the "UP" position and "LOCKED" in place.

14. TENSION ADJUSTMENT SYSTEM USE:

14.1 with the door guides adjusted correctly and the door tensioned properly, the door should open and close very smoothly and not need the use of the chain hoist or other opener. With the hand chain hoist disconnected and the door in the upper third of its height, it should slowly raise by itself but not raise fast enough to slam into the top stops. With the door fully closed, it should slowly raise by itself but not raise fast enough to slam into the top stops. With the door fully closed, it should be able to be opened when lifted from the middle of the bottom bar assembly.

14.2 If the tension needs to be adjusted, loosen all 3/8-16 square head set screws in the tensioner, axle saddle, and chain hoist if applicable.

NOTE!

Tensioning should always be done on the side of the door that the tension device is installed.

⚠ WARNING

Serious injury may occur if the door tension is not fully assumed by the pipe wrench before releasing the tension on the tension device by pushing upward on the spring pin. Never force the spring pin. The door tension must be released before pushing on the spring pin.

14.3 To remove tension, grasp the end of the axle pipe with a pipe wrench and apply a slight amount of pressure downward and hold. Disengage the cam lock by pushing back on the spring pin. Release tension by moving the pipe wrench backwards (see Figure 19). Release the spring pin and the cams will engage to hold tension on the door. Repeat as many times as necessary.

14.4 To add tension, grasp the end of the axle pipe with pipe wrench and apply pressure downward. The cam locks will disengage as pressure is being applied. The tensioner will automatically grip the axle and hold the new tension.

14.5 Retighten all 3/8-16 square head set screws that were loosened in 13.1.

14.6 Repeat step 14 as needed.

⚠ WARNING

Never operate door if the 3/8-16 square head set screws are not fully tightened on the axle saddles.

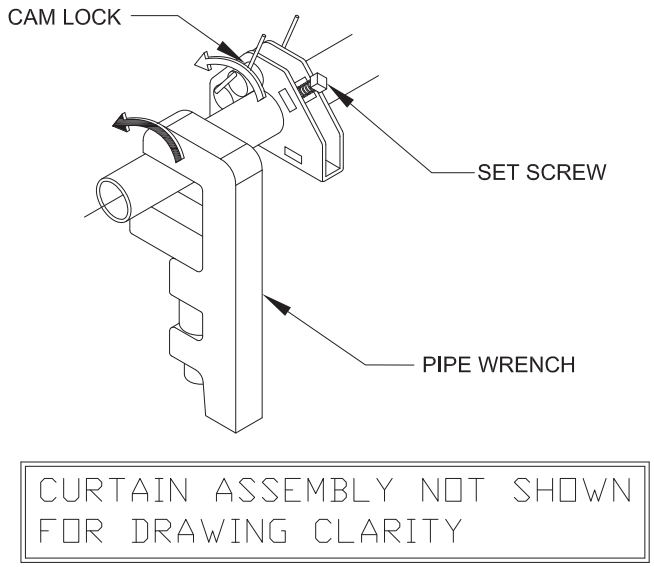

Figure 19.

NOTE!

If the door is easy to close, but hard to open, increase the spring tension. If the door is hard to close, but easy to open, decrease spring tension.

15. OPTIONAL FIELD INSTALLED DRAFT STOP OR BRUSH SEAL:

15.1 Place the door in the closed position before installing the draft stop. Note that with the door down, the curtain may bow slightly near the top towards the inside; this bowing is normal. For the draft stop to be effective, it should follow the "bow" in the door curtain so that it stays in contact across the entire width of the door curtain. Starting at one end, attach to header every 9 inches with appropriate fasteners. Cut to length if necessary.

15.2 Place the door in the closed position before installing the brush seal. Position brush seal so that it just touches the valley portion of the curtain. See Figure 20. Fasten brush seals to jamb every 12 inches with appropriate fasteners.

⚠ CAUTION

Excessive force in operation may cause damage to the door.

16**. MAINTENANCE**

16.1 INSPECTION: Visually inspect the entire door monthly for general cleanliness and ease of operation.

16.1.1 Inspect the guides and curtain for wear and/or accidental damage.

16.1.2 Inspect all fasteners and anchor bolts for loose, damaged, or missing parts.

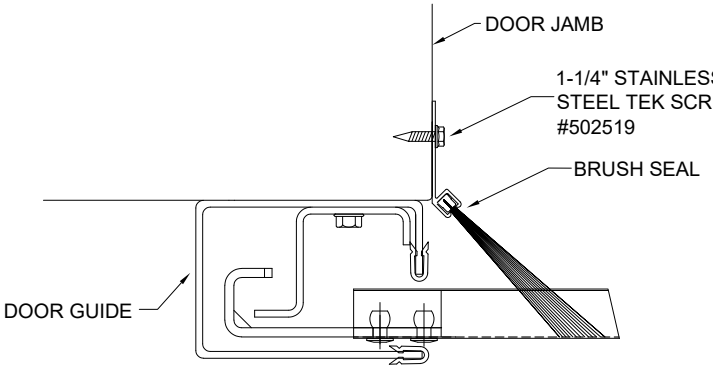

Figure 20.

16.1.3 If door is equipped with a chain hoist mechanism, inspect it for missing parts.

16.2 CLEANING: No specific cleaning procedures are required for your Trac-Rite rolling door. Clean as needed following good housekeeping practices.

16.2.1 Periodically clean any accumulated dirt from guides; remove any debris from the guide channels at the floor.

16.3 LUBRICATION: Lubricate the following every six months or more in dusty and/or wet operating environments.

16.3.1 Guides: Open the door. Spray silicone spray, Pledge™, or Zep 45™ onto the door guide runners and inside the guide.

16.3.2 Lock: Spray the slide lock with silicone spray or Pledge™ to promote smooth lock operation.

16.3.3 Chain Hoist Parts: Apply a small amount of oil to roller chain.

17. REPLACEMENT PARTS

Part No.	Description
Locks:	
521226	Interior Lock Package
601811	SpaceGuard Latch Package
502705	SpaceGuard Lock
502721	Lock Out Key
Hardware:	
650080	Bracket, Universal, RH, LH
502680	42” Rope (8’ - 10’ tall)
508840	72” Rope (10’ - 12’ tall)
508841	90” Rope (over 12’ tall)
651000	Steel Jamb Package (651005 w/ Windlocks)
651001	Wood Jamb Package (651006 w/ Windlocks)
651002	Concrete Jamb Package
650060	Axle Saddle w/ Tensioner
650070	Axle Saddle
Springs:	
650101	RH, 3.375” ID, 0.3125 wire, 49 coils, 15.63”
650111	LH, 3.375” ID, 0.3125 wire, 49 coils, 15.63”
650121	RH, 3.375” ID, 0.3125 wire, 68 coils, 21.56”
650131	LH, 3.375” ID, 0.3125 wire, 68 coils, 21.56”
600961	RH, 3.375” ID, 0.283 wire, 62 coils, 19.50”
Miscellaneous:	
502297	Seal-Rite Bulb Seal
521261	Felt Tape, 2”
502061	Guide Runner
502520	Draft Stop
504300	Touch-up Paint, Evergreen
504301	Touch-up Paint, Sunset Orange
504302	Touch-up Paint, Polar Blue
504303	Touch-up Paint, Royal Blue
504305	Touch-up Paint, Desert Tan
504306	Touch-up Paint, Continental Brown
504307	Touch-up Paint, Garnet
504308	Touch-up Paint, Iced White
50430A	Touch-up Paint, Cedar Red
504325	Touch-up Paint, Shale
504323	Touch-up Paint, Bright White
504329	Touch-up Paint, Patriot Red
504332	Touch-up Paint, Lime Green
504326	Touch-up Paint, UB Yellow
504290	Touch-up Paint, Light Stone
504331	Touch-up Paint, Ash Gray
Operators:	
651050	8:1 Reduced Drive Chain Hoist
625300	MJ1211 Operator